TT-23-2000-O

- Aluminum profile with opal acrylic.
- Designed to cover and dissipate heat of the LED strips.
- Available in lengths 2000 mm (78³/₄ ").

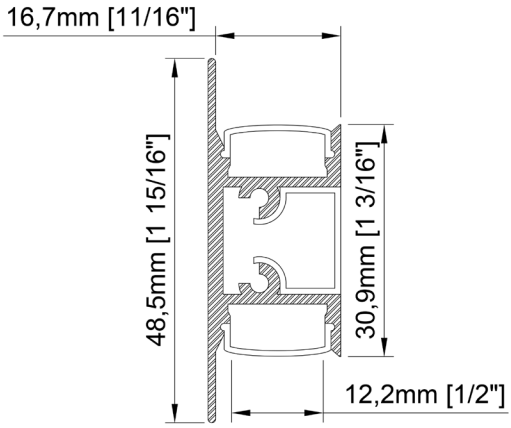

Size	48,5mm x 16,7mm x 2000mm 1 ¹⁵/₁₆" x ¹¹/₁₆" x 78³/₄"
Lenght	2000mm 78³/₄"
Internal width	2 x 12,2mm 2 x ¹/₂"
Cover	Matte Opal PMMA Clear PMMA Black PMMA PC diffuser

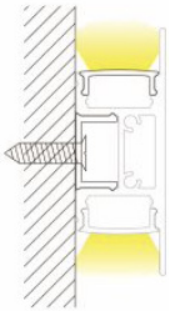

Accessories

TT-23-CLIP

TT-23-END

PRODUCT CODE

TT	-	MODEL	-	LENGHT (mm)	-	COVER
TT	-	23	-	2000	-	O