TT-07-3000-O

- Aluminum profile with opal acrylic.
- Designed to cover and dissipate heat of the LED strips.
- Available in lengths 3000 mm (118 ").

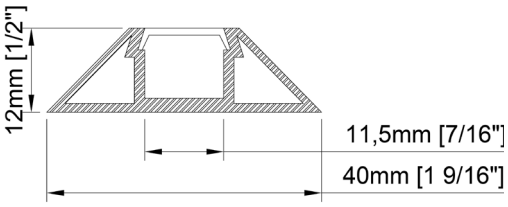

Size	40mm x 12mm x 3000mm 1 9/16" x 1/2" x 118 1/8"
Lenght	3000mm 118 1/8"
Internal width	11,5mm 7/16"
Cover	Opal

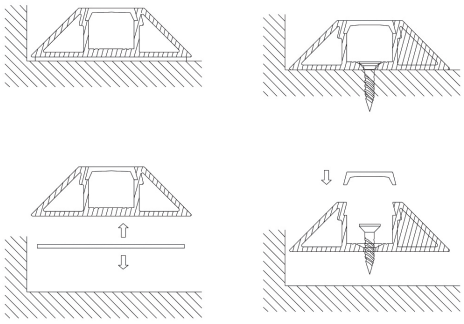

Accessories

TT-07-END

PRODUCT CODE

TT	-	MODEL	-	LENGHT (mm)	-	COVER
TT	-	07	-	3000	-	O