TT-22-3000-O

- Aluminum profile with clear acrylic.
- Designed to cover the LED ribbons and dissipate heat.
- Acrylic lens concentrates the light in a range of 30 °
- Swivel attachment to guide the light.
- Available in lengths 3000 mm (118 1/8").

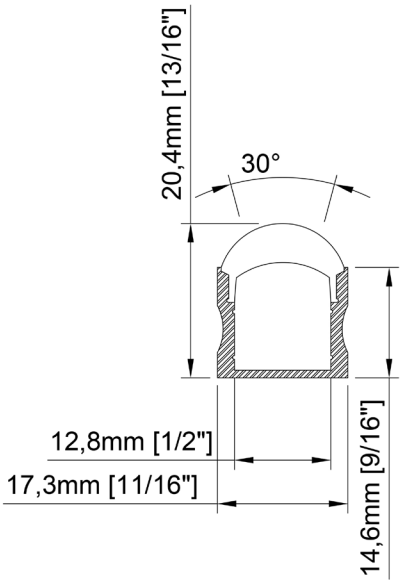

Size	20,4mm x 17,3mm x 3000mm 13/16"x 11/16" x 118 1/8"
Lenght	3000mm 118 1/8"
Internal width	12,8mm 1/2"
Cover	Clear, 30° lens

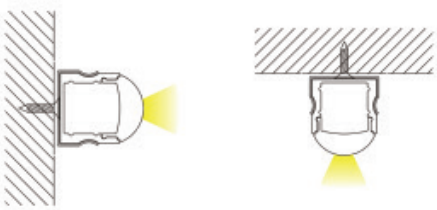

Accessories

TT-22-CLIP

TT-22-END

PRODUCT CODE

TT	-	MODEL	-	LENGHT (mm)	-	COVER
TT	-	22	-	3000	-	O