TT-04-3000-O

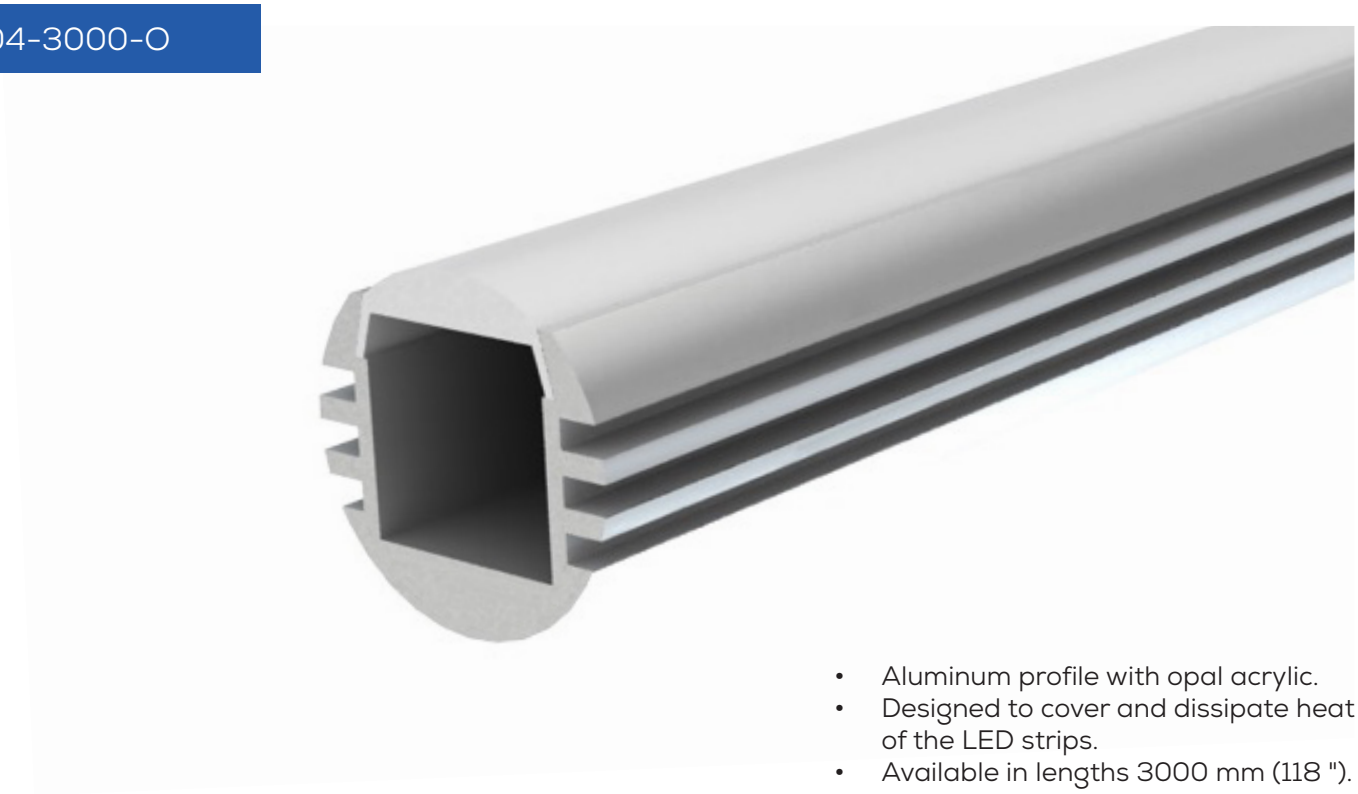

- Aluminum profile with opal acrylic.
- Designed to cover and dissipate heat of the LED strips.
- Available in lengths 3000 mm (118 ").

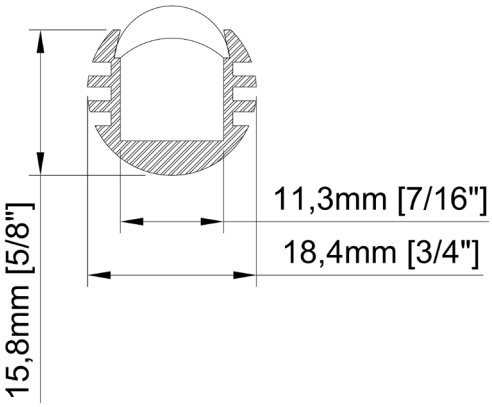

Size	Ø18,4mm x 3000mm Ø¾" x 118 ⅛"
Lenght	3000mm 118 ⅛"
Internal width	11,3mm 7/16"
Cover	Opal

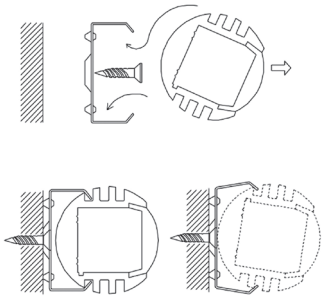

Accessories

TT-04-CLIP

TT-04-END

PRODUCT CODE

TT	-	MODEL	-	LENGHT (mm)	-	COVER
TT	-	04	-	3000	-	O