TITANIUM
TECHNOLOGY

TT-21-3000-O

- Aluminum profile with white acrylic.
- Designed to cover and dissipate heat of the LED strips.
- Available in lengths 3000 mm (118 1/8").

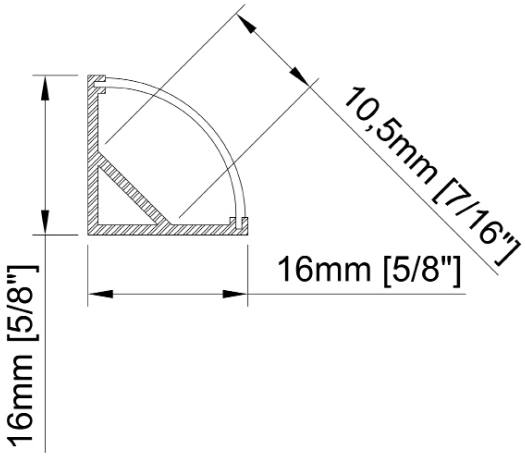

Size	16mm x 16mm x 3000mm 5/8"x 5/8" x 118 1/8"
Lenght	3000mm 118 1/8"
Internal width	10,5mm 7/16"
Cover	Matte Opal PMMA Clear PMMA Black PMMA PC diffuser

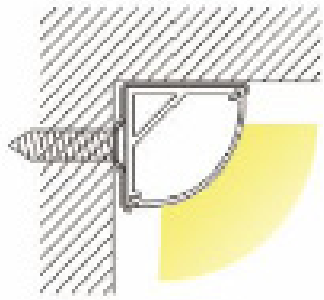

Accessories

TT-21-CLIP

TT-21-END

PRODUCT CODE

TT	-	MODEL	-	LENGHT (mm)	-	COVER
TT	-	21	-	3000	-	O